Clean biomass staged gasifier based on new tar cracking and ash slagging technics for efficient CHP generation

L. Van de steene[*a], P. Girard[a], T. Koch[b], A. Bensakhria[c]
[a]Centre de Coopération Internationale de Recherche Agronomique pour le Développement (CIRAD), TA 10/16, 73, avenue J.-F. Breton, 34398 Montpellier, Cedex 5, France
Fax : 33 4 67 61 65 15 ; steene@cirad.fr
[b]Thomas Koch Energi (TKE), Denmark, [c]Université Technologique de Compiègne (UTC), France

For the decentralised use of biomass fuels, the combination of thermal and electrical energy production seems promising from an economic point of view. Nevertheless it needs clean and robust technologies with high overall efficiency and maximum electricity yield.

The gasification technology for small scale application (below 5 MW) still needs substantial research and development especially in the gas cleaning area.

Our ongoing research aims at developing a new technology of staged gazification.

Objectives

To overcome this situation, the overall objective of this European Project is to develop a new process characterised by:

1. higher tolerance towards quality of the feedstock (ash : 15% and above, moisture up to 30% and above),
2. reduction of carbon content in the ash (98% carbon recovery),
3. reduction of the tar in the end gases to follow standards for engine uses,
4. more robust and efficient gasification set up.

The achievements of these objectives should result in the following benefits :

1. the usual costly tar cleaning set up will not be necessary,
2. the efficiency of the process will increase because carbon content in ashes will approach zero,
3. the total gasification process will become environmentally cleaner,
4. the elimination of operational problems arising from low melting point of biomass ashes thanks to the vitrification process.

Innovation description

Our innovation aimed at :

1. Introducing a new device named Total Char Combustion and Tar Cracking Chamber (TCC^2) between the pyrolysis unit (PYR) and the char reduction chamber in a stage divided gasifier. With this design, the char conversion takes place in 2 steps. The first step is the Char Reduction Chamber (CRC) whose main purpose is to convert as much as possible carbon of the char supplied directly from the pyrolysis unit into gas by means of reduction reactions. The second step takes place in the TCC^2 whose purpose, with respect to the char is to perform a complete conversion of the remaining carbon from the CRC drain off and where pyrolysis gases are thermally cracked and residual ashes are vitrified and eliminated as slag.

2- Designing and implementing a new vibrated fluidization pyrolysis unit able to achieve an appropriate and constant quality of char with minimum preparation of biofuel with a good phase separation.

3- Offering the opportunity to direct the process for gas and solid reactions by simple operating conditions as a function of the plant requirement and market condition.

Results and conclusion

The works in progress for 2 years have right now shown the individual performances for the 2 original reactors : The pyrolysis unit and the TCC^2 . Three biomasses have been tested : Pine bark, Rice Husk and Straw.

We showed :

1. Charcoal/pyrolysis gases ratio was controlled by temperature and residence in the PU from 20 to 60 % of char yield. Control of these parameters will allow to direct the pyrolysis reaction toward gas or solid according to overall process needs.
2. Biomass with 30 % moisture content can be used.
3. The ability in a TCC^2 reactor to both vitrify the mineral content of char and to convert completely its carbon content.

In order to prove the feasibility of our overall innovation : "A clean biomass staged gasifier based on new tar cracking and ash slagging technics for efficient CHP generation", we currently finish the erection of the whole installation of 60 kg/h raw biomass (see figure).

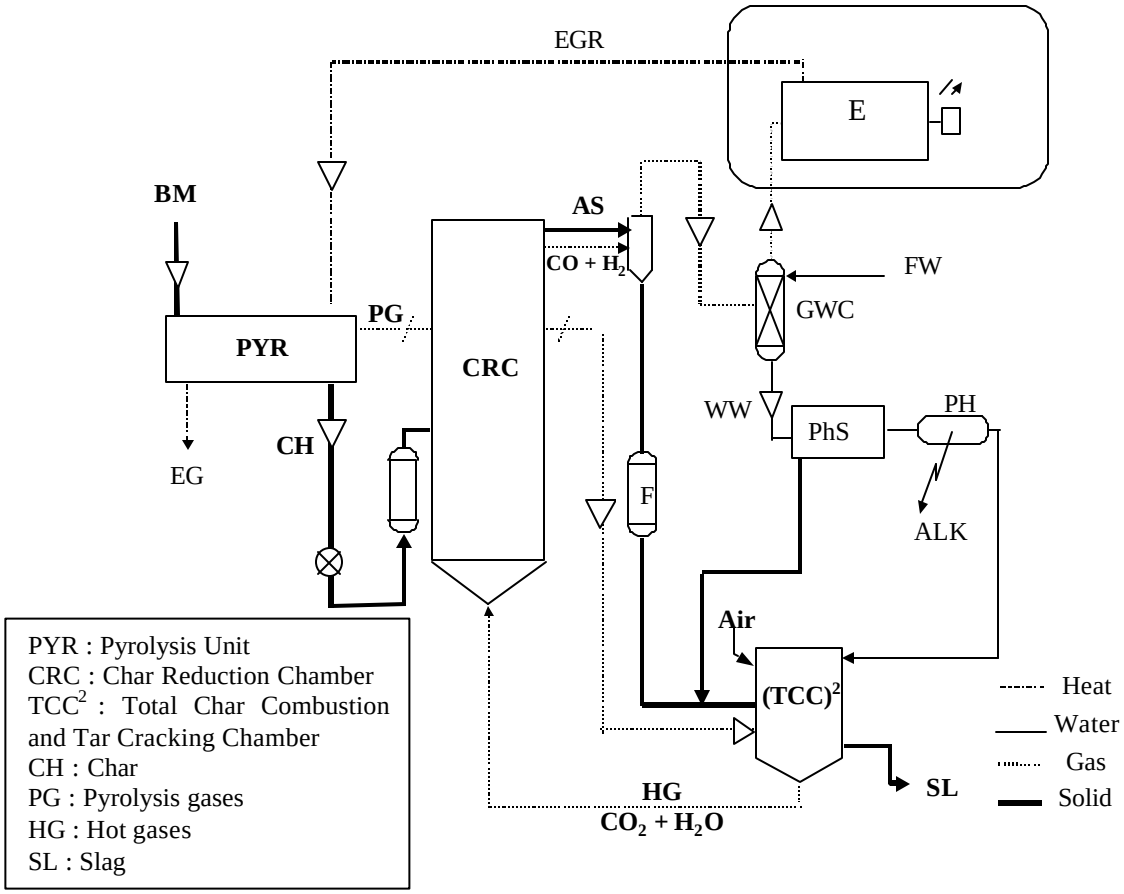

Figure: A clean biomass staged gasifier based on new tar cracking and ash slagging technics for efficient CHP generation